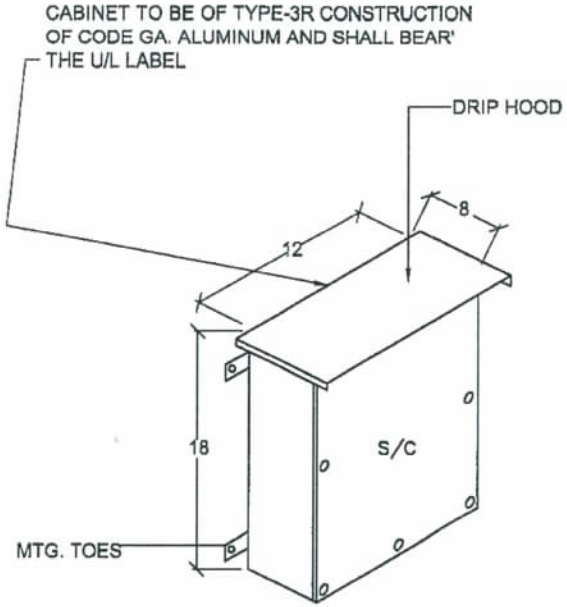

ISOMETRIC VIEW

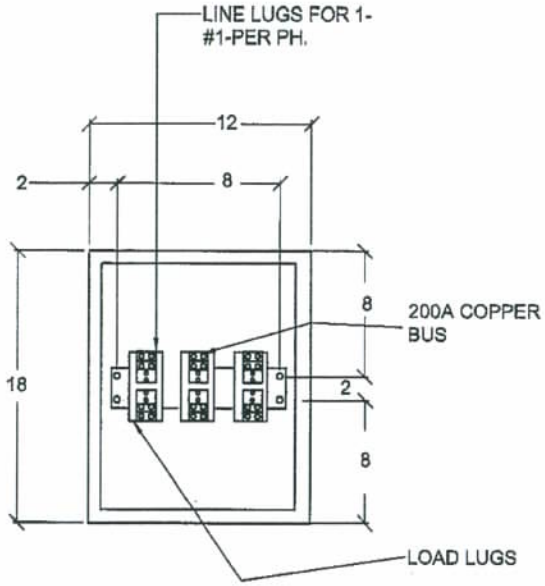

FRONT VIEW WITH COVER REMOVED

200A 3W TYPE 3R TAP BOX
GENERATOR TERMINATION BOX

CHICAGO SWITCHBOARD CO., INC. 470 W. WRIGHTWOOD AVE. ELMHURST, IL. 60126 TELE.#630-833-2266 FAX.#630-833-2277	CONTRACTOR A.P. ELECTRIC & GENERATORS 204 NORTHWEST HWY. FOX RIVER GROVE, IL.	JOB	DWN. BY DLJ	DATE 09-02-09
			SALE ENG. PAUL K.	DATE
			DWG. NO. 36184-1B	S.O. NO. 36184
			REV.	REV.